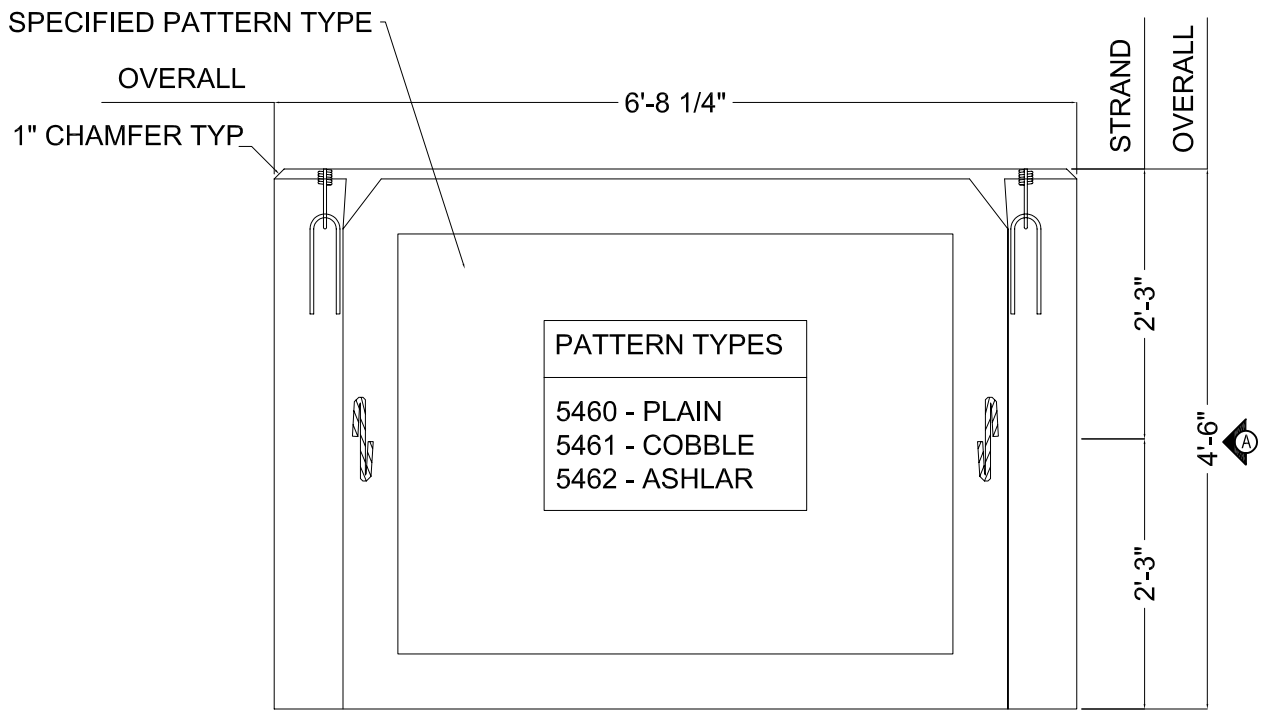

MOLD VIEW B

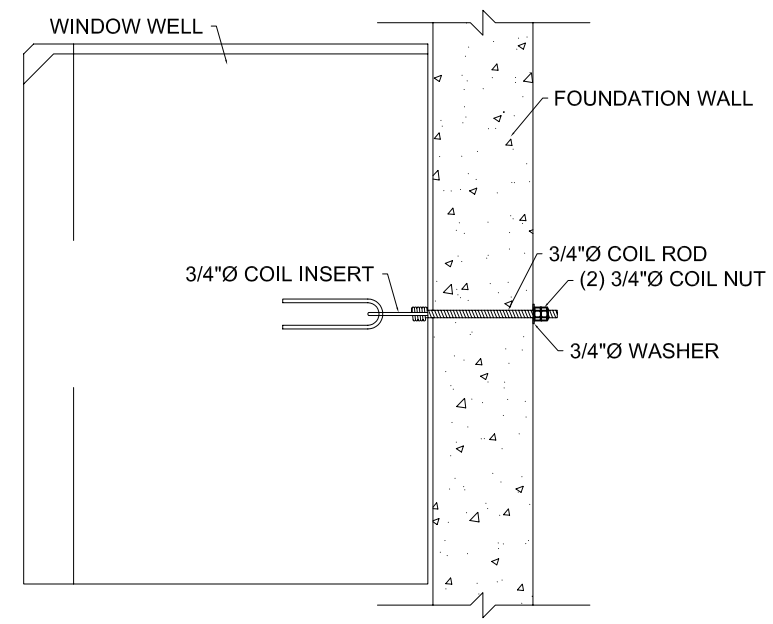

CONNECTION DETAIL

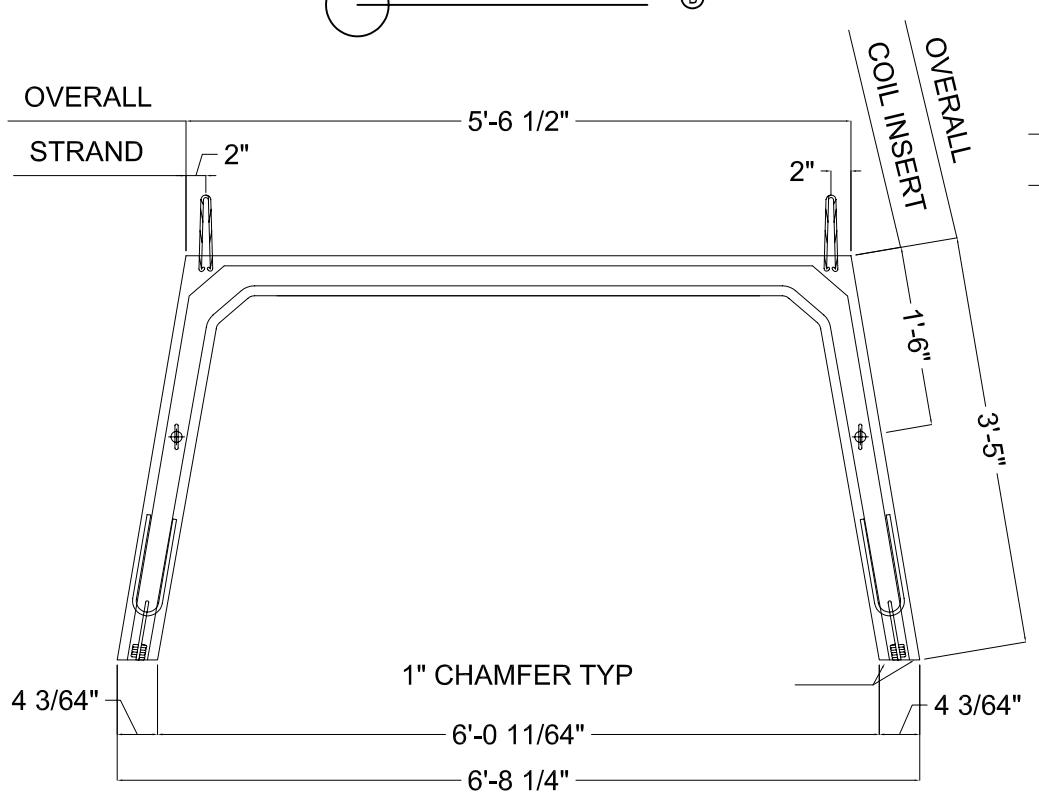

SIDE B

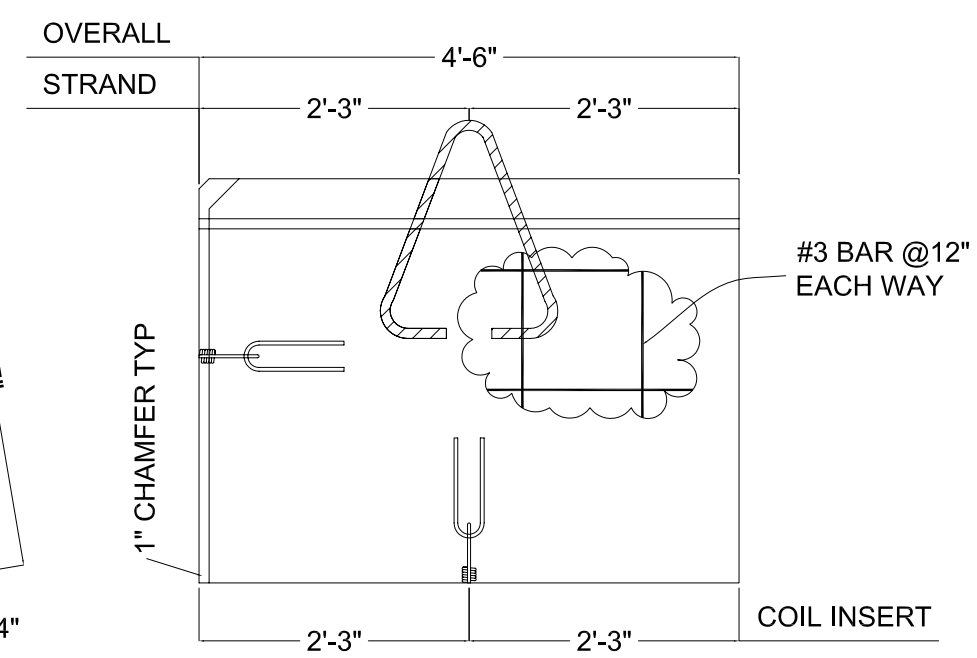

SIDE A

SCALE: 5/8" = 1'

TYP. 5' x 4'-6" WINDOW WELL	
CONCRETE	
f'c = 5,000 PSI	f'ci = 3,500 PSI
SLUMP: 4"	FPU: 75%
FINISH: PATTERN	MIX: 5600 SP
WEIGHT: 150 LBS. PCF.	AIR: 5%
VOLUME: 0.67 C.Y.	SHIPPING WT: 2,721 LBS.

VERTI-CRETE® MOLDS FORMS
16500 SOUTH 500 WEST
BLUFFDALE, UTAH 84065
PHONE: (801) 571-2028
FAX: (801) 606-7786

SHEET TITLE:	CHECKED BY:
STANDARD WINDOW WELL	R.B.
DRAWN BY:	SHEET #
D.A.	546
DATE:	
9-29-06	